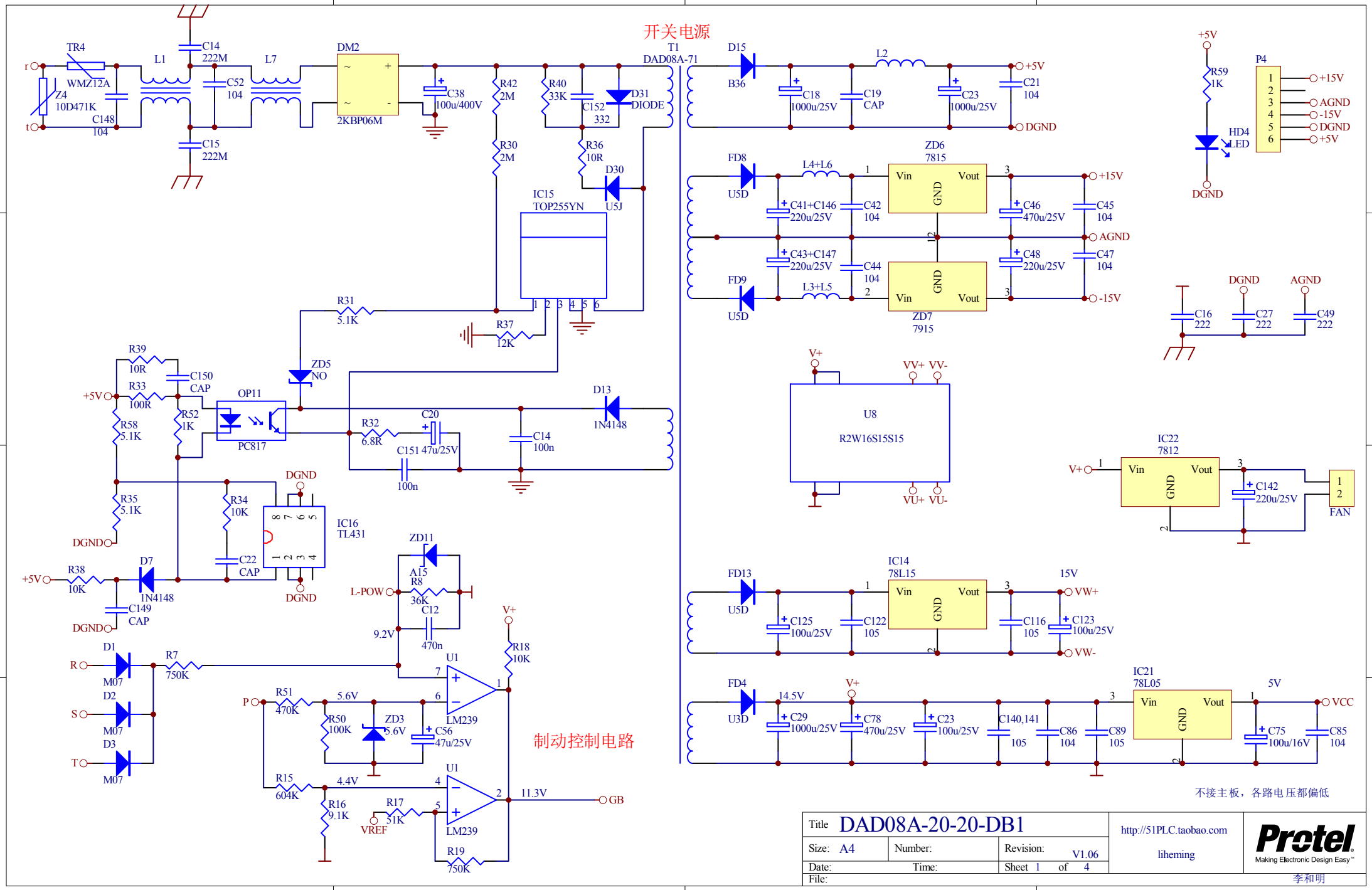
开关电源
制动控制电路
TR4
WMZ12A
Z4
10D471K
C148
104
L1
C14
222M
C15
222M
C52
104
L7
DM2
2KBP06M
C38
100u/400V
R42
2M
R30
2M
R40
33K
C152
332
D31
DIODE
T1
DAD08A-71
R36
10R
D30
U5J
IC15
TOP255YN
R37
12K
R31
5.1K
ZD5
NO
R39
10R
C150
CAP
R33
100R
OP11
PC817
R52
1K
R58
5.1K
R32
6.8R
C20
47u/25V
C151
100n
C14
100n
D13
1N4148
R35
5.1K
R34
10K
C22
CAP
IC16
TL431
R38
10K
D7
1N4148
C149
CAP
ZD11
A15
R8
36K
C12
470n
L-POW
9.2V
V+
R18
10K
U1
LM239
D1
M07
R7
750K
D2
M07
D3
M07
R51
470K
5.6V
R50
100K
ZD3
5.6V
C56
47u/25V
R15
604K
4.4V
R16
9.1K
R17
51K
VREF
11.3V
GB
R19
750K
D15
B36
C18
1000u/25V
L2
C19
CAP
C23
1000u/25V
C21
104
+5V
DGND
FD8
U5D
L4+L6
C41+C146
220u/25V
C42
104
ZD6
7815
Vin
Vout
GND
C46
470u/25V
C45
104
+15V
AGND
C43+C147
220u/25V
C44
104
C48
220u/25V
C47
104
FD9
U5D
L3+L5
ZD7
7915
-15V
R59
1K
HD4
LED
P4
+15V
AGND
-15V
DGND
+5V
C16
222
C27
222
C49
222
U8
R2W16S15S15
V+
VV+ VV-
VU+ VU-
IC22
7812
C142
220u/25V
FAN
FD13
U5D
C125
100u/25V
C122
105
IC14
78L15
15V
C116
105
C123
100u/25V
VW+
VW-
FD4
U3D
14.5V
C29
1000u/25V
C78
470u/25V
C23
100u/25V
C140,141
105
C86
104
C89
105
IC21
78L05
5V
C75
100u/16V
C85
104
VCC
不接主板，各路电压都偏低
Title DAD08A-20-20-DB1
Size: A4
Number:
Revision: V1.06
Date:
Time:
Sheet 1 of 4
File:
http://51PLC.taobao.com
liheming
Protel
Making Electronic Design Easy
李和明